RECLINING ERGOMETER

ergoselect 10

ergoline

MOVING TO HEALTH

RECLINING ERGOMETER

ergoselect 10

The half-reclining ergometer *ergoselect 10* is a multi-function device that offers a high level of safety during the ergometric test, particularly for older patients.

The couch surface can be adjusted from a horizontal position up to a 38° angle. The inclination angle and seat position are set via an electrical drive by remote control.
With just a few movements, the unit can be converted to a comfortable examination couch – the ergometric test unit is lowered into the couch area and the seat is simply removed.

Learn more about ergoselect 10 –
with 360° view and technical features.

ergoline reclinig ergometer ergoselect 10

ergoline
MOVING TO HEALTH

- patient weight up to 200 kg
- horizontal tilt up to 38°
- remote motor control (wireless option)
- ergometry unit folds away easily
- whisper-quiet belt drive
- load range from 6 to 450 Watts
- high-quality upholstery fabric
- choice of upholstery colors available
- universal interfaces
- wide range of expansion options

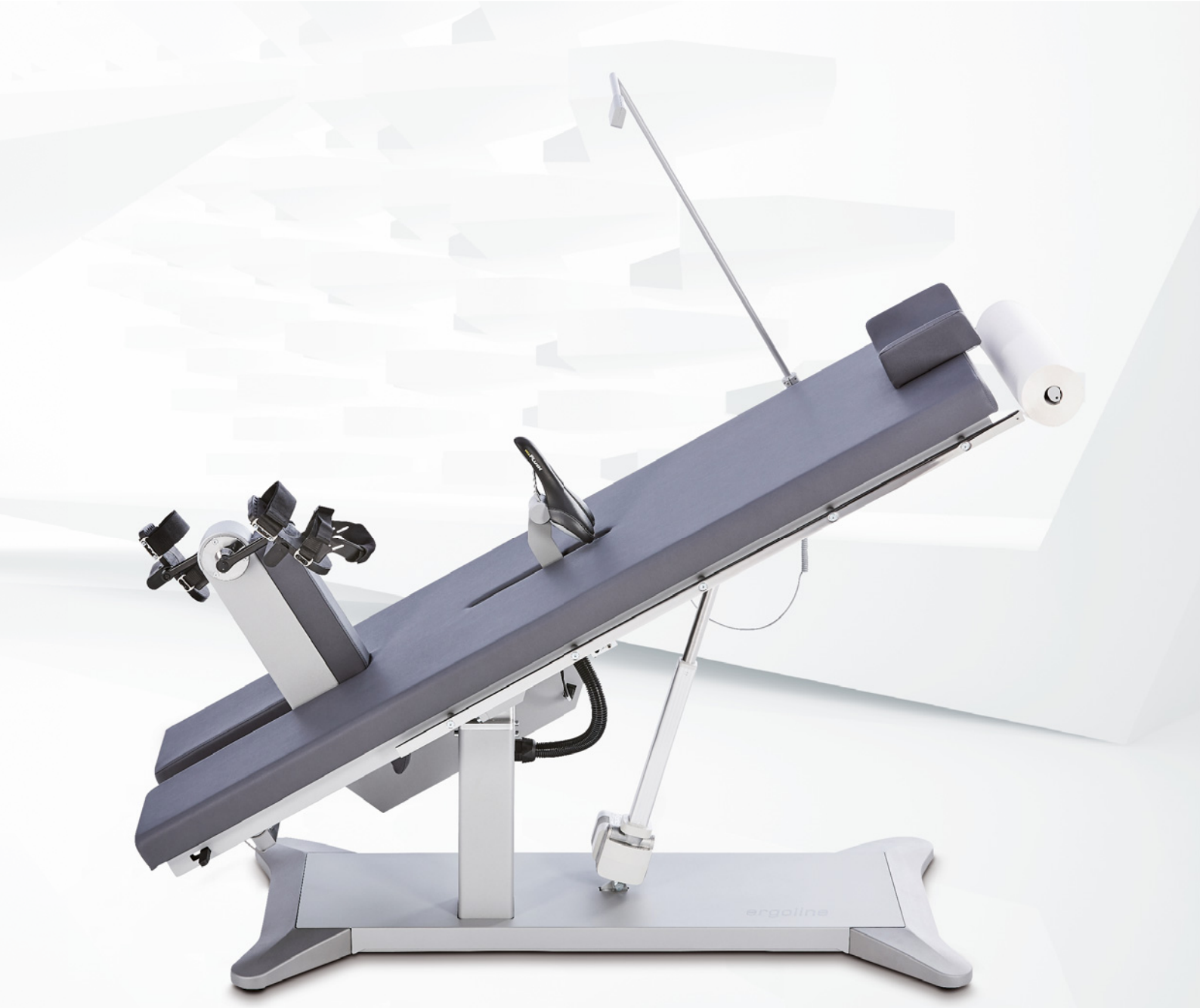

Max. patient weight up to 200 kg

The stable base frame and the vibration-free design guarantee the highest level of safety and enable the use of the reclining ergometer with morbidly obese patients.

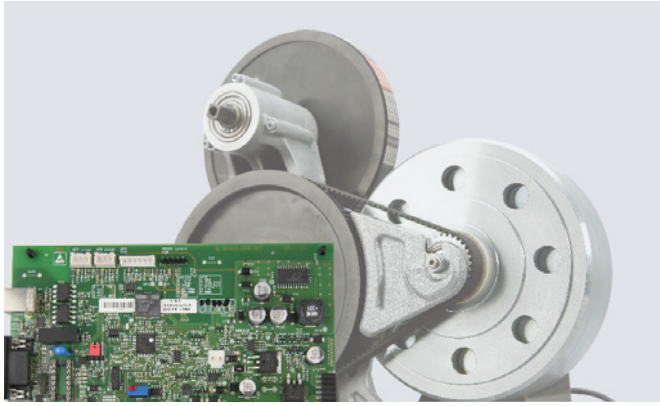

Precise load control

Thanks to the use of high-quality sensor electronics and reliable components, our devices don't just meet the standard specifications for medical ergometers, but far exceed them. Over the entire load range from 6 to 450 Watts.

Moreover, the special two-stage belt drive ensures whisperquiet operation during an ergometric test.

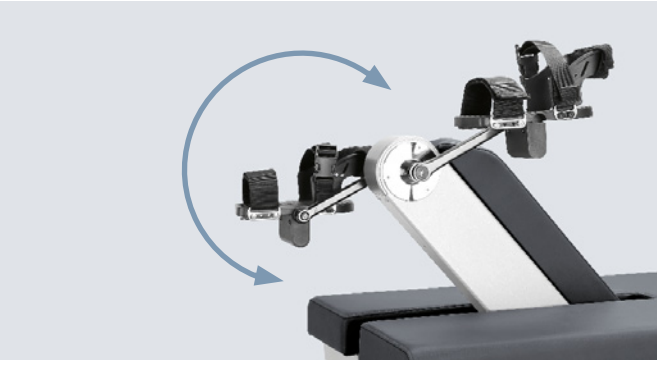

Folding ergometry unit

A single hand movement turns the ergoselect 10 into a fullfledged comfortable examination couch – simply unlock the ergometry unit and lower it into the couch surface.

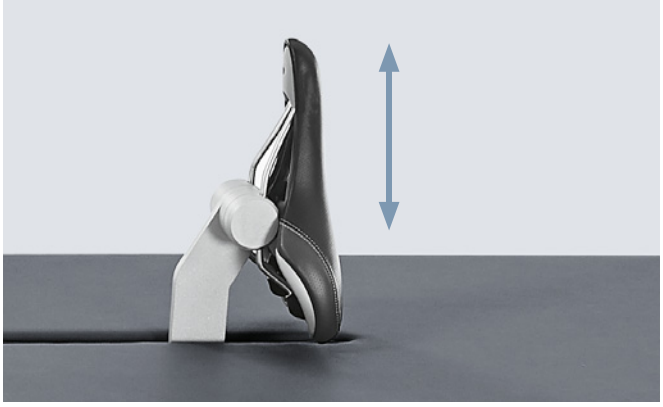

Seat

The seat can easily be pulled off, without leaving any inconvenient rails or mounting elements in the couch surface.

Various seat adapters allow for easy adjustment to special patient sizes.

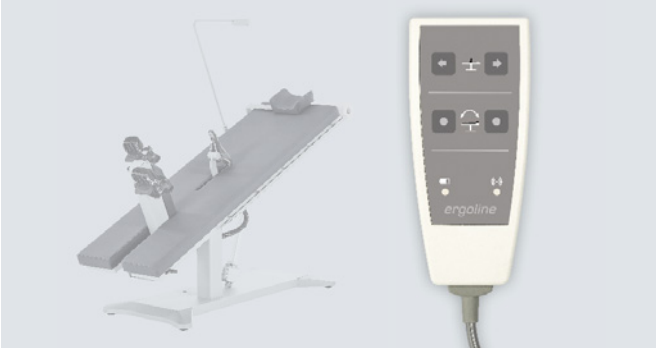

Remote control

The examination position and seat settings can be conveniently adjusted via remote control; a wireless version is available on request.

Hygienic upholstery fabric in a variety of colors

The high-quality upholstery fabric with its fine microstructure is an ideal choice:

It is durable, easy to disinfect, and antibacterial, to name just a few of the outstanding material properties. The pad cushions are available in many colors to match any practice or hospital interior design.

ECG connection/interfaces

All leading ECG manufacturers support a control option for ergoline ergometers in their exercise ECG or ergospirometry systems.

ergoline ergometers offer a wide range of connection options. In addition to the standard RS-232 and USB interface, wireless connections via Bluetooth or WiFi are available as well.

ergoselect 10 – Measurement

Dimensions

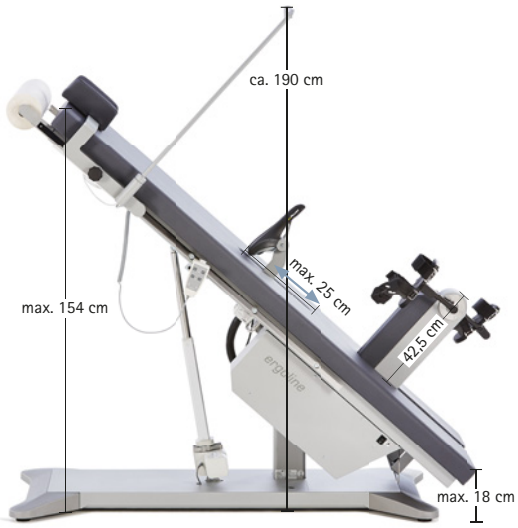

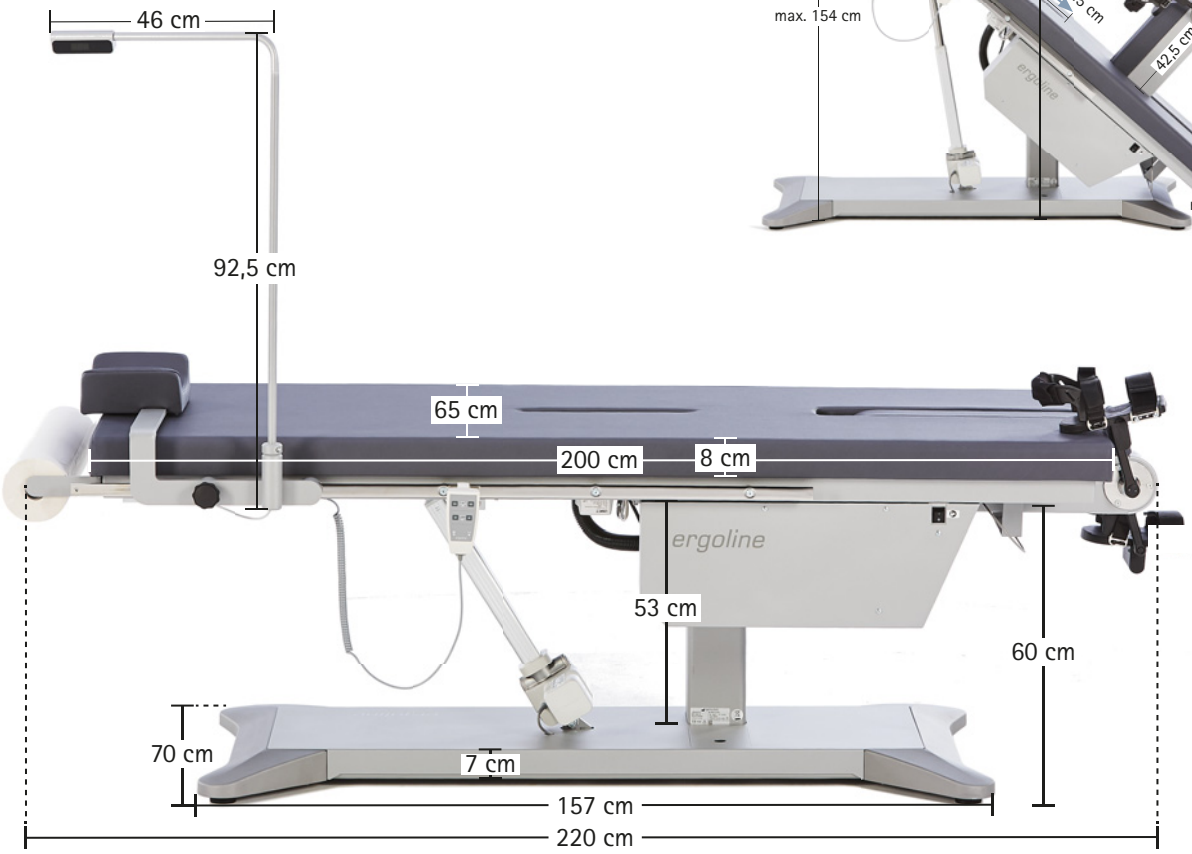

ergoselect 10 – Technical Specifications

Reclining ergometer	**ergoselect 10**			
Adjustment of couch surface (tilt)	horizontal inclination up to 38°, continuous, motor-driven via remote control			
Seat adjustment	continuous, motor-driven via remote control			
Remote control, cable / wireless	● / ○			
Couch surface	200 cm x 65 cm			
Couch height (examination couch)	73 cm			
Upholstery fabric	easy-care, abrasion-resistant, antimicrobial, antibacterial acc. to JIS Z 2801, disinfectant-resistant, fulfills requirements of German Medical Devices Act (MPG) acc. to DIN EN ISO 10993-5, -10			
Patient weight (max.)	200 kg			
Break unit				
Brake system	computer-controlled eddy current brake			
Drive	special multi-stage belt technology (no slippage, low wear)			
Load	6 – 450 watts, speed-independent			
Accuracy	to DIN VDE 0750-238			
Speed range	30 – 130 rpm			
Control terminal	**Type "D"**	**Type "M"**	**Type "P"**	**Type "T"**
Integrated / on separate stand	● / –	– / ○	– / ○	– / ○
Display, numeric	–	load, speed (rpm), time, blood pressure (LCD)		7" color display
Display, graphic (e.g., load or pulse curve)	–	–	–	●
Patient display	–	speed with target range, swiveling		
Keyboard	–	–	membrane keyboard	touch keyboard
Exercise test protocols				
User programmable	–	–	10	10
Manual load control	–	–	●	●
Training protocols				
User programmable	–	–	–	10
Preprogrammed performance tests	–	–	–	3
Expansion options				
Automatic blood pressure measurement	○	○	○	○
SpO2	–	–	○	○
Interfaces				
digital (RS-232, USB) / Bluetooth / WiFi	● / ○ / ○			
Dimensions and weight				
Reclining ergometer		**Reclining ergometer with packaging**		
Length: 220 cm		Length: 230 cm		
Width: 90 cm (with attachments)		Width: 98 cm		
Height: 180 cm (max.)		Height: 110 cm		
Weight: approx. 217 kg		Weight: approx. 259 kg		
Miscellaneous				
Power supply	100 – 240 V AC / 50 – 60 Hz / 200 VA max.			

● Standard ○ Option

CE 0123

PREMIUM QUALITY

ergoline

MOVING TO HEALTH

MADE IN GERMANY

ergoline GmbH
Lindenstraße 5 | D-72475 Bitz, Germany
Phone: +49-(0)-7431-9894-0 | Fax: +49-(0)-7431-9894-128
email: info@ergoline.com | www.ergoline.com

Some of the illustrations in this brochure show options which must be purchased separately. The information provided is based on data valid at the date of printing. Subject to modifications. 02/2024